GROUNDHOG INDUSTRIES

RAISING THE BAR

SEEDING

PRECISION FERTILISER & SEEDING PARTS PRODUCT RANGE 2018

WHY CHOOSE GROUNDHOG INDUSTRIES PRECISION FERTILISER & SEEDING PARTS?

Groundhog Industries design and manufacture precision seeding and fertiliser parts to achieve the following goals:

1. PROVIDE MORE EFFECTIVE PRODUCT DELIVERY

This is achieved by a quick change knife, a hardened steel liquid / granular fertiliser boot, incorporating plastic tubing for liquid fertiliser delivery, eliminating the need for stainless tubing and blockages caused from bending. The thickened cast side walls allow for proper placement of granular fertiliser below the seed with soil separation. In addition we offer a range of interchangeable seed placement tools for inline seeding or banding with heavy duty carbide to maintain depth and seed split.

2. REDUCE DOWNTIME WHEN:

Digging: This is achieved by using a tapered quick change, cast steel knife point requiring minimal tools to change whilst in the field and under the machine.

Fertilising: A heavy duty, hardened steel, deep banding fertiliser boot. Set and forget.

Placing seed: Using our unique "SEEDHOG SYSTEM" quickly allows only the bottom ground engaging parts to be replaced by removing a roll pin.

3. REDUCE REPLACEMENT COST

Through innovative design, Groundhog products are better value per hectare than their competitors. By using the highest grade of tungsten carbide available as well as state of the art application processes, all Groundhog products have been designed and tested to offer maximum protection from wear at the best price.

CONTENTS

FULL ASSEMBLY	2
QUICK CHANGE KNIVES	3-4
LIQUID & GRANULAR FERTILISER BOOT	5
REAR CAST ARM	6
EXPLODED DIAGRAM	7-8
SEEDHOG SYSTEM	9-10
FITTING/SERVICING KNIFE HOLDER, KNIFE & FERT BOOT	11
TESTIMONIALS	11
SPLITTER BOOT FITTING GUIDE	12
PARTS & ACCESSORIES	13-14

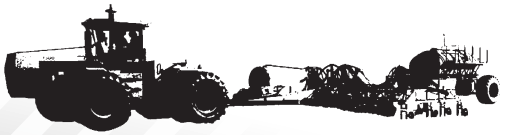

THROUGHOUT BROCHURE:

PRODUCT CODE

00 ITEM NUMBERS (SEE EXPLODED DIAGRAM P7-8)

FULL ASSEMBLY

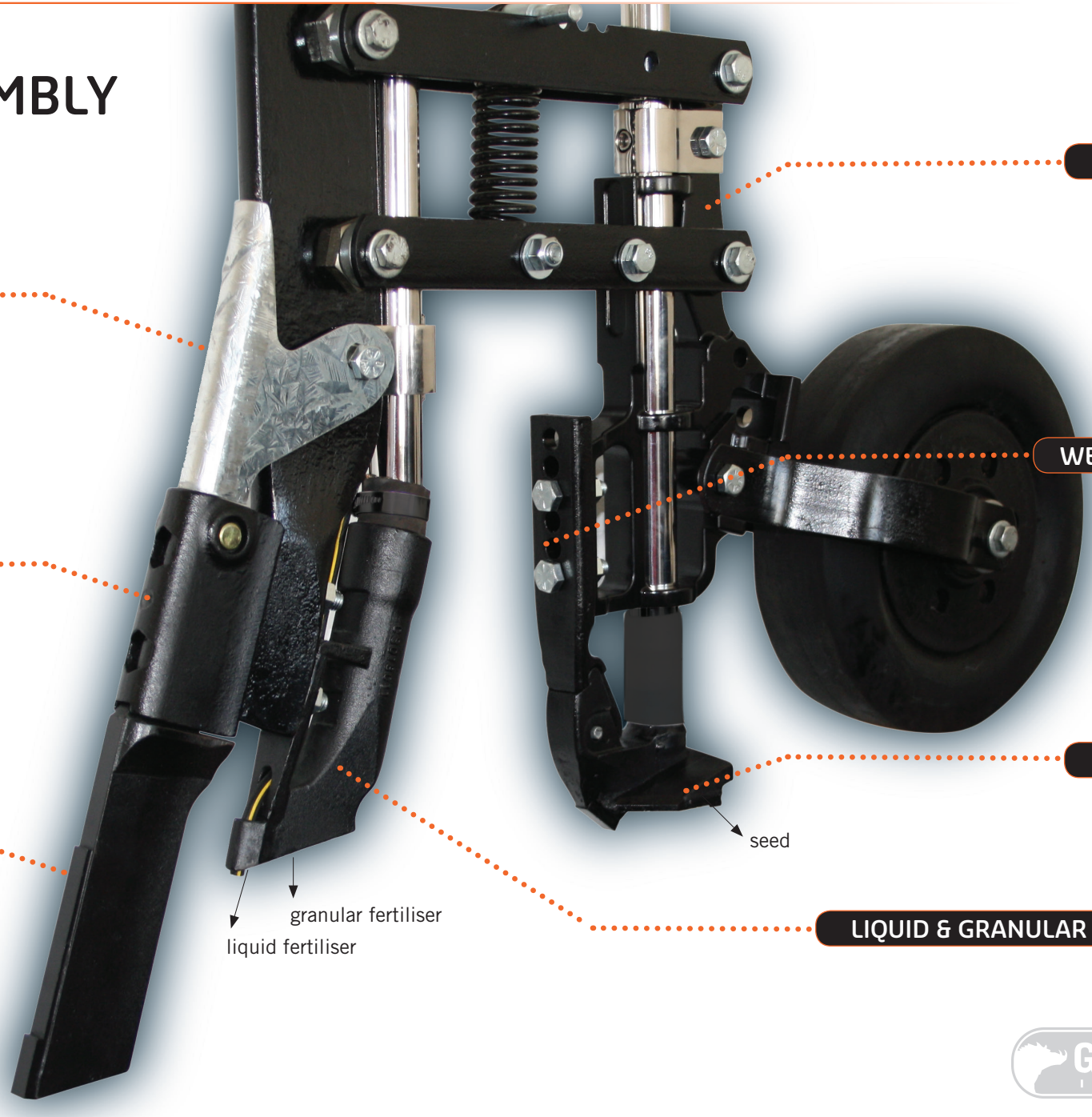

GROUNDHOG INDUSTRIES

QUICK CHANGE KNIVES

FEATURES

- Manufactured from cast steel for superior strength.
- Highest grade of carbide available and applied using induction welding, with proven results for wear and shock loads.
- Low cost and quick to change.
- Change points quickly by removing the split pin with a hammer, no rattle gun, no lost skin loosening bolts.

SERVICE TIP:

Always take knife point out of the holder at the end of the season and give knife holder a tap with a hammer to remove any excess dirt or clay. Although the knife point is tapered this will reduce the build up of material inside the holder and make extraction easier.

Always install knife holder using anti-seize on the thread of all bolts to make it easier to remove.

New bolts are recommended for first time installation. Worn bolt heads can turn inside the hex head housing on tightening and over time bolts can stretch from over tightening and become brittle.

When inserting split pin, only bend tips of pin for easy removal. To save time remove pins using side cutters or a hammer to shear off pin. Replace with a new pin.

DESIGN REG (KNIVES): 335055

DESIGN REG (HOLDER): 335056

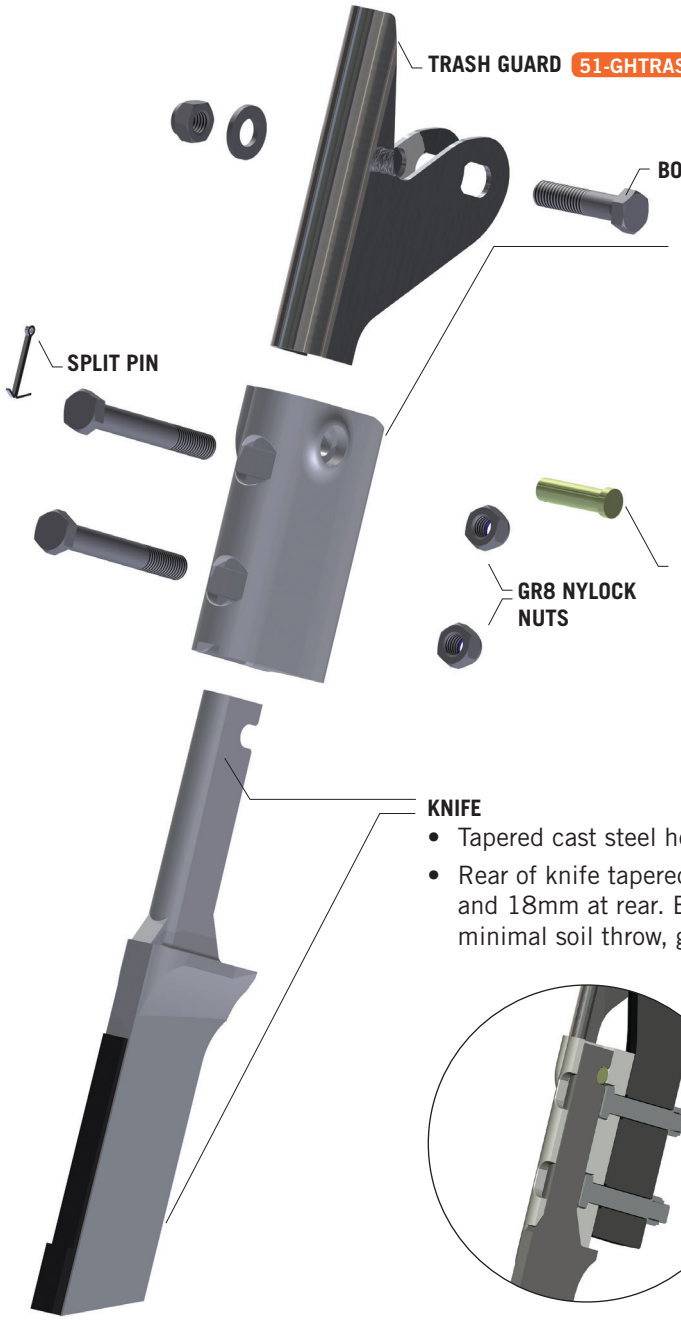

KNIFE HOLDER 11-GH006 11

- Takes the brunt of the load in combination with the load pad at the rear of the knife.
- Hugs shank neatly reducing likelihood of bolts loosening.
- Bolts are counter sunk in holder to cater for tapered knife head.
- Holder employs the same length bolts as standard points.

CLEVIS PIN

- never exposed to load and therefore can't be damaged

KNIFE

- Tapered cast steel head makes it easy to insert & remove in holder.
- Rear of knife tapered to increase wear life, 13mm at the front and 18mm at rear. Both point and holder are low profile allowing minimal soil throw, good trash handling.

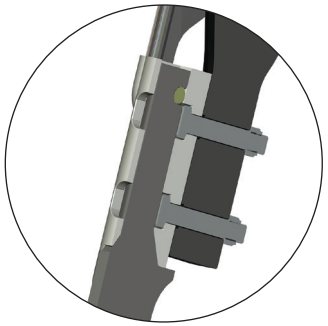

CROSS SECTION

- Boltheads are counter sunk in the knife holder.

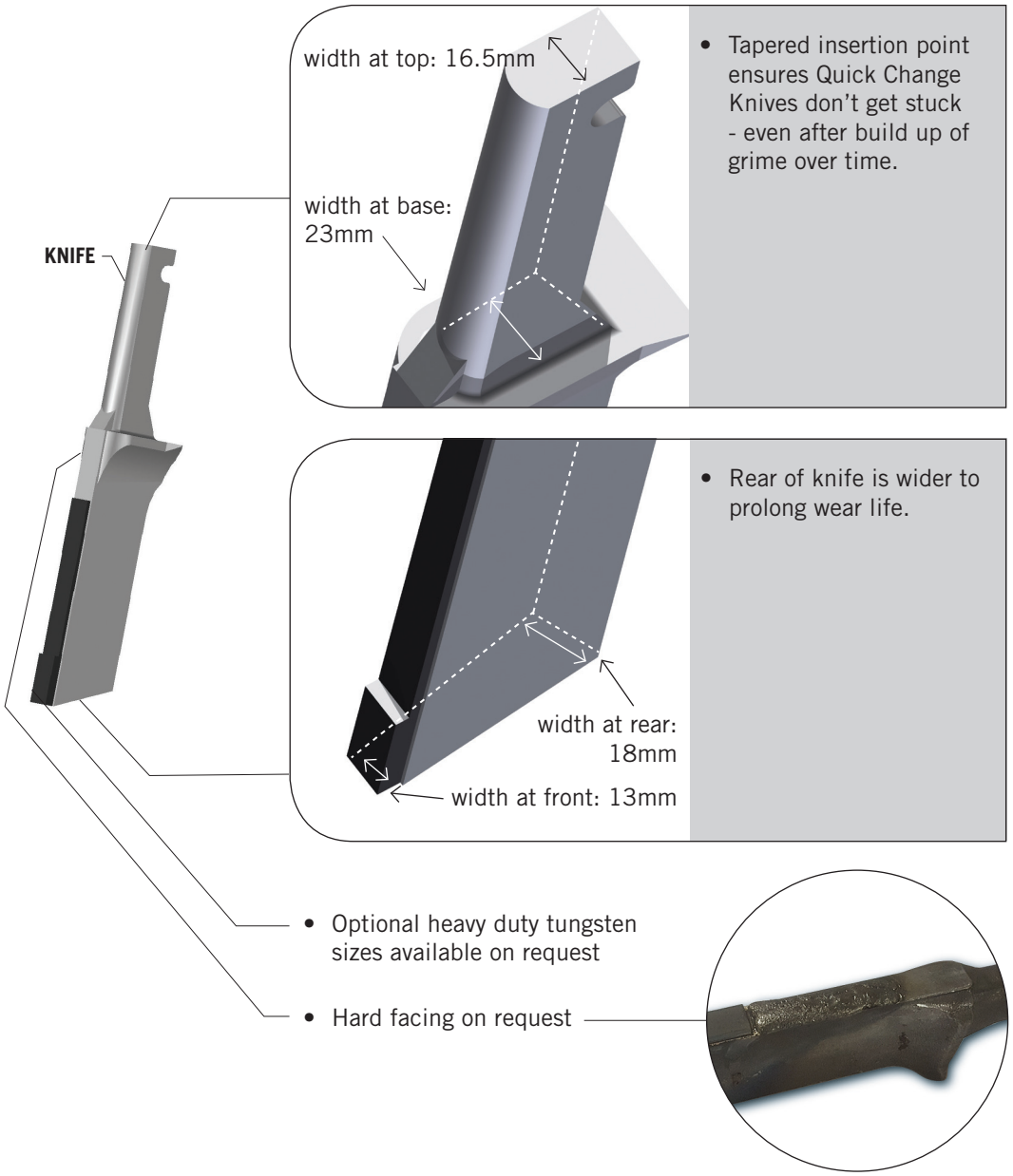

SIZES AVAILABLE:

LIQUID & GRANULAR FERTILISER BOOT ..

FEATURES

- Robust cast boot provides accurate placement of liquid and granular fertiliser below the seed. This design enables the boot to be deeper in the ground and the steel side walls of the boot provide a wear resistant shield delaying the flow of soil back into the trench.
- Using plastic tube eliminates the need for expensive stainless steel tubing, the need to weld a nut to the rear of the point and prevents bending or blockages.
- The plastic tube remains undisturbed during point changes saving time and money.
- The boots design provides a protected pathway for the plastic fertiliser tube to ground level.
- Boot is compatible with stainless and powder coated granular fertiliser tubes.

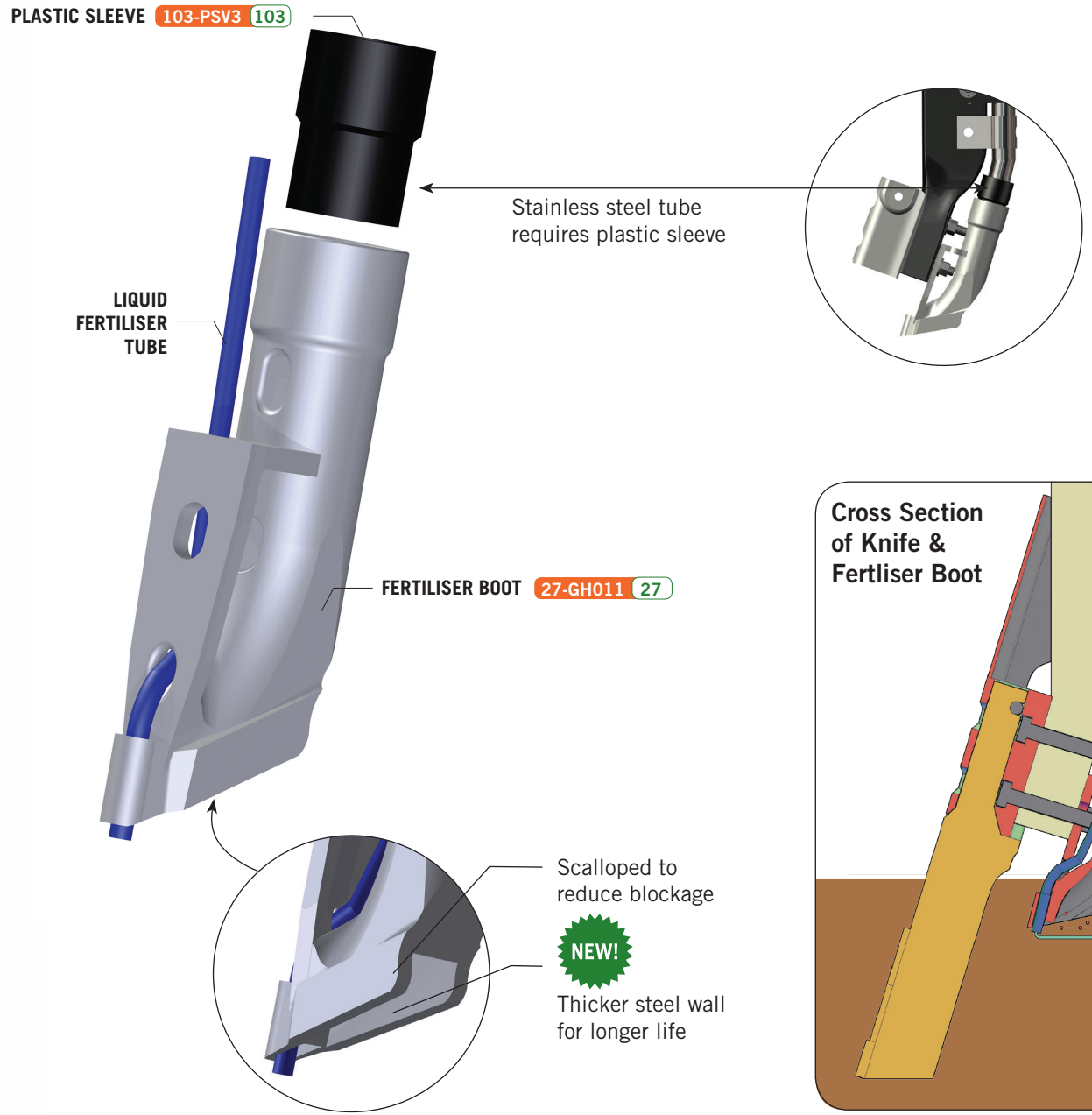

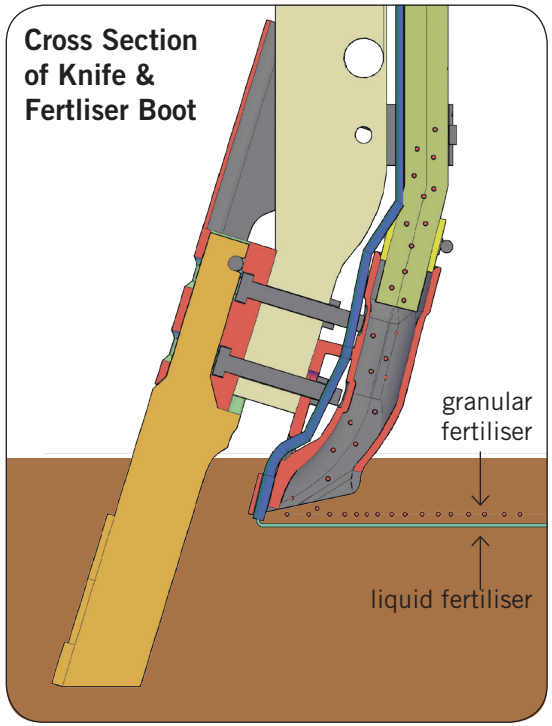

SERVICE TIP:
Our fertiliser boot has been designed to place product deeper in and under the seed than other fertiliser boots and therefore comes into contact with the soil. Because of this we have increased the wall thickness to increase wear life. We also offer application of tungsten grit hard facing on request.

DESIGN REG: 335057

REAR CAST ARM

- Take the slop and play out of your parallelogram seeding units with our affordable rear cast arm seeding unit.
- Original welded bush housings become flogged out after multiple bush changes and can fail to hold bushing tightly in place requiring expensive and timely repair.
- Rear Cast Arm replaces the following OEM part numbers on series 1 to 4 machines:

  1366 - Seed Tube, 11350 - Rib Weldment Assembly, 27203 - Rib Press Wheel Arm.

FEATURES

- Changing of bushes is made easier utilising the replaceable bush housing. Bushes can be replaced in the field without the need to visit the workshop and press out old bushing.
- Seeding tools can be attached to the Rear Cast Arm using two bolts by use of an elongated top hole to accommodate all seed heights. Never lose expensive closing tools in the field again.
- To utilise all available spare parts in a farmers shed, old and new mud scrapers can be used including series 2 and 3 mud scrapers.
- Features a replaceable stainless seed tube.

SHANK PIVOT KIT*

- Now available as a complete kit with bushes already installed in the bush housing.

DESIGN REG: 367176

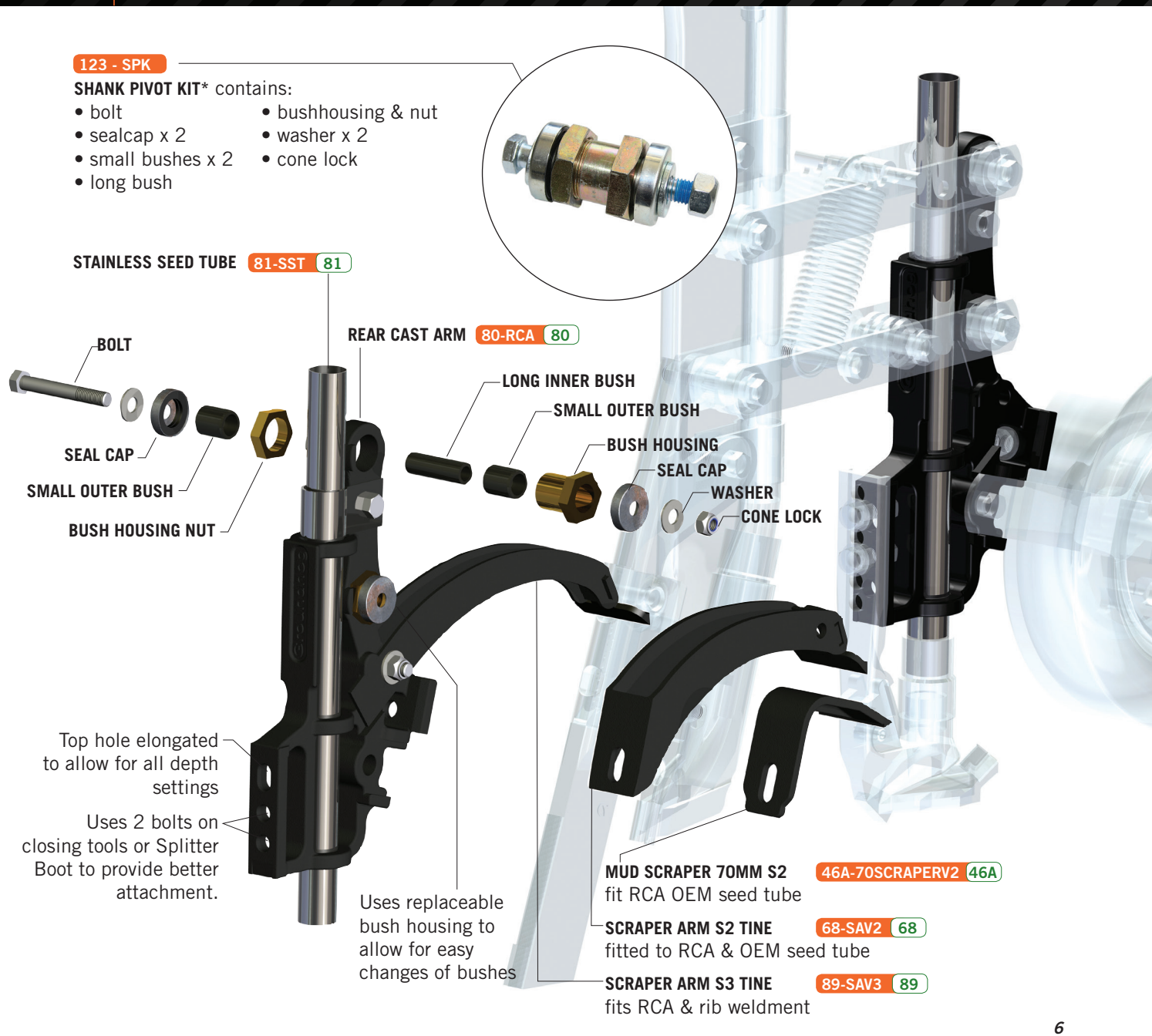

EXPLODED DIAGRAM

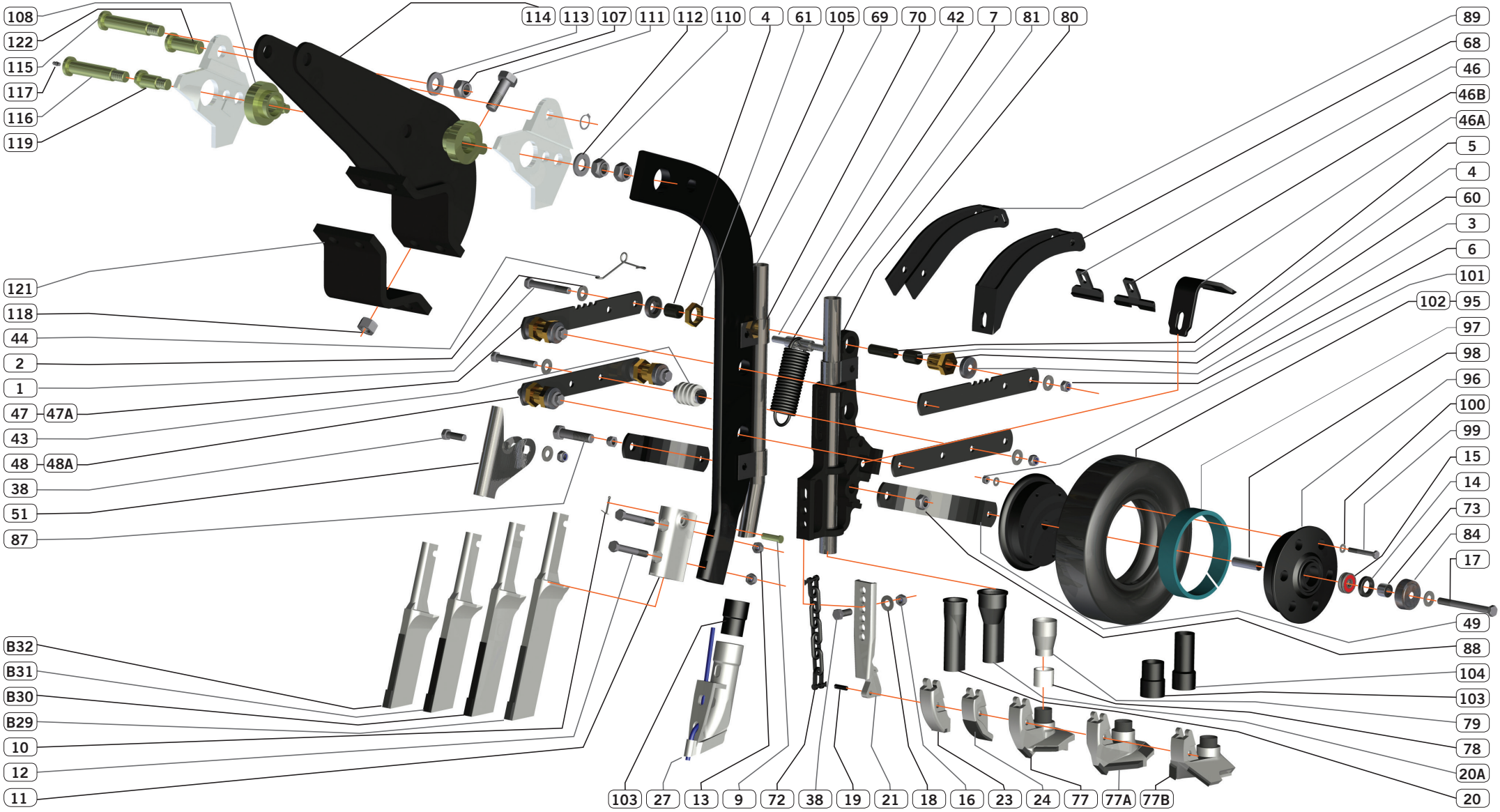

ITEM	NAME	PART #
1	BOLT M12 X 90 ZP	1-M12X90
2	FLAT WASHER M12	2-M12WF
3	SEAL CAP	3-GHSEAL
4	SHORT BUSH	4-GHSB
5	LONG BUSH	5-GHLB
6	NUT M12 CONELOCK	6-M12CONE
7	SPRING 5.6 X 42 X120	7-SP120
9	CLEVIS PIN	9-GH005
10	SPLIT PIN BAG OF 50	10-GHSPIN
11	KNIFE HOLDER	11-GH006
12	BOLT 1/2" -13 X 3 1/4"	12-G8 12 X3.14NC8B
13	NUT 1/2" UNC NYLOC	13-12NCNN
14	PRESS WHEEL DUST SEAL	14-GHPWSEAL
15	PRESS WHEEL BEARING	15-PWBJ
16	NUT 1/2 UNC PLAIN NUT	16-12NC8NBU
17	BOLT M12 X 150	17-M12X150
18	WASHER 1/2" SPRING ZP	18-12SQSW
19	ROLL PIN	19-GH010
20	PLASTIC SEED BOOT - 32 ID	20-GH32
20A	PLASTIC SEED BOOT - 42 ID	20A-GH42
21	WEAR SHOE HOLDER	21-GH012
23	WEAR SHOE 30MM WIDE	23-GH030
24	WEAR SHOE 30MM HD	24-GH030HD
27	FERTILISER BOOT	27-GH011
B29	9"KNIFE BUILT	B29-GH09
B30	8"KNIFE BUILT	B30-GH08
B31	7"KNIFE BUILT	B31-GH07
B32	6"KNIFE BUILT	B32-GH06
38	BOLT 1/2" X 1. 3/4 UNC	38-12X1.34NC8B
42	PIN SPRING HOLDER	42-PSH
43	GH STOPPER	43-STOPPER
44	RETAINING SPRING	44-RSPRING
45	SPRING	45-SSPRING
46	MUD SCRAPER 70MM S3	46-70SCRAPERV3
46A	MUD SCRAPER 70MM S2	46A-70SCRAPERV2
46B	MUD SCRAPER 90MM S3	46B-90SCRAPERV3
47	SIDE ARM UPPER (LONG)	47-ARMUP
47A	SIDE ARM UPPER (SHORT)	47A-ARMUPA
48	SIDE ARM LOWER (LONG)	48-ARMLOW
48A	SIDE ARM LOWER (SHORT)	48A-ARMLOWA
49	PRESS WHEEL ARM	49-PWARM
51	TRASH GUARD	51-GHTRASH
60	BUSH HOUSING	60-BHOUSING
61	BUSH HOUSING NUT	61-BHN
68	SCRAPER ARM S2 TINE	68-SAV2
69	GRANULAR FERT TUBE	69-GFT
70	FERT TUBE BRACKET	70-FTB
72	WEAR SHOE HOLDER CHAIN	72-WSHC
73	PRESSWHEEL SPACER	73-PWS
77	SPLITTER BOOT	77-SB80
77A	SPLITTER BOOT V2	77A-SB80V2
77B	INVERTED SPLITTER BOOT	77B-IV80
78	HEIGHT SLEEVE FOR SPLITTER BOOT	78-HS80
79	SEED FUNNEL FOR SPLITTER BOOT	79- F80
80	REAR CAST ARM	80-RCA
81	STAINLESS SEED TUBE	81-SST
84	PRESS WHEEL BEARING COVER	84-PWBC1
87	PRESS WHEEL BOLT- M16 X 70 2P	87-PWBOLT
88	PRESS WHEEL LOCK NUT M16 X ZP	88-PWLN
89	SCRAPER ARM S3 TINE	89-SAV3
94	STAINLESS SEED TUBE S3	94-SSTV3
95	PRESSWHEEL TYRE 300 X 70MM	95-PWT70
96	PRESS WHEEL HUB	96-PWH
97	RETAINING RING	97-RR
98	INTERNAL PRESSWHEEL SPACER	98-IPWS
99	BOLT M8X60MM	99-BM8X60
100	WASHER M8FLAT	100-WM8F
101	NUT M8 CONELOCK	101-NM8CL
102	PRESS WHEEL TYRE 300 X 120MM	102-PWT120
103	PLASTIC SLEEVE 60MM S3	103-PSV3
104	PLASTIC SLEEVE 100MM S2	104-PSV2
105	SHANK	105-SHK
106	SPACER FOR SB80V2	106-SFSB80
107	NUT - M20 - ZP - CONELOCK	107-M20CONE
108	BUSH ASSY - SHANK PIVOT	108-BASP
110	NUT - M24 - ZP - NYLOCK	110-M24NLOCK
111	BOLT M20 X 60 C10.9 ZP	111-M20X60
112	WASHER FLAT - M24 - ZP	112-WFM24
113	WASHER FLAT - M20 - ZP	113-WFM20
114	PIVOT BRACKET ASSY	114-PBA
115	PIN - JUMP CYL BASE	115-PJCB
116	PIN SHANK PIVOT	116-PSP
117	GREASE NIPPLE 1/4" BSW	117-GN
118	HEX NUT M20 C10.9 ZP	118-HNM20
119	PIN 25 X 64 SHANK PIVOT	119-P25X64
121	CLAMP PLATE - PIVOT BRACKET	121-CPPB
122	PIN 25X75 JUMP CYLINDER	122 - PJC25X75
125	ADAPTER PLATE S2	125 - APS2

THERE IS NO RELATIONSHIP BETWEEN GROUNDHOG INDUSTRIES AND AUSPLOW PTY LTD. AUSPLOW PTY LTD HAS NOT APPROVED THE USE OF GROUNDHOG INDUSTRIES PARTS ON ITS MACHINERY.

INVERTED SPLITTER BOOT FITTED TO SERIES 3

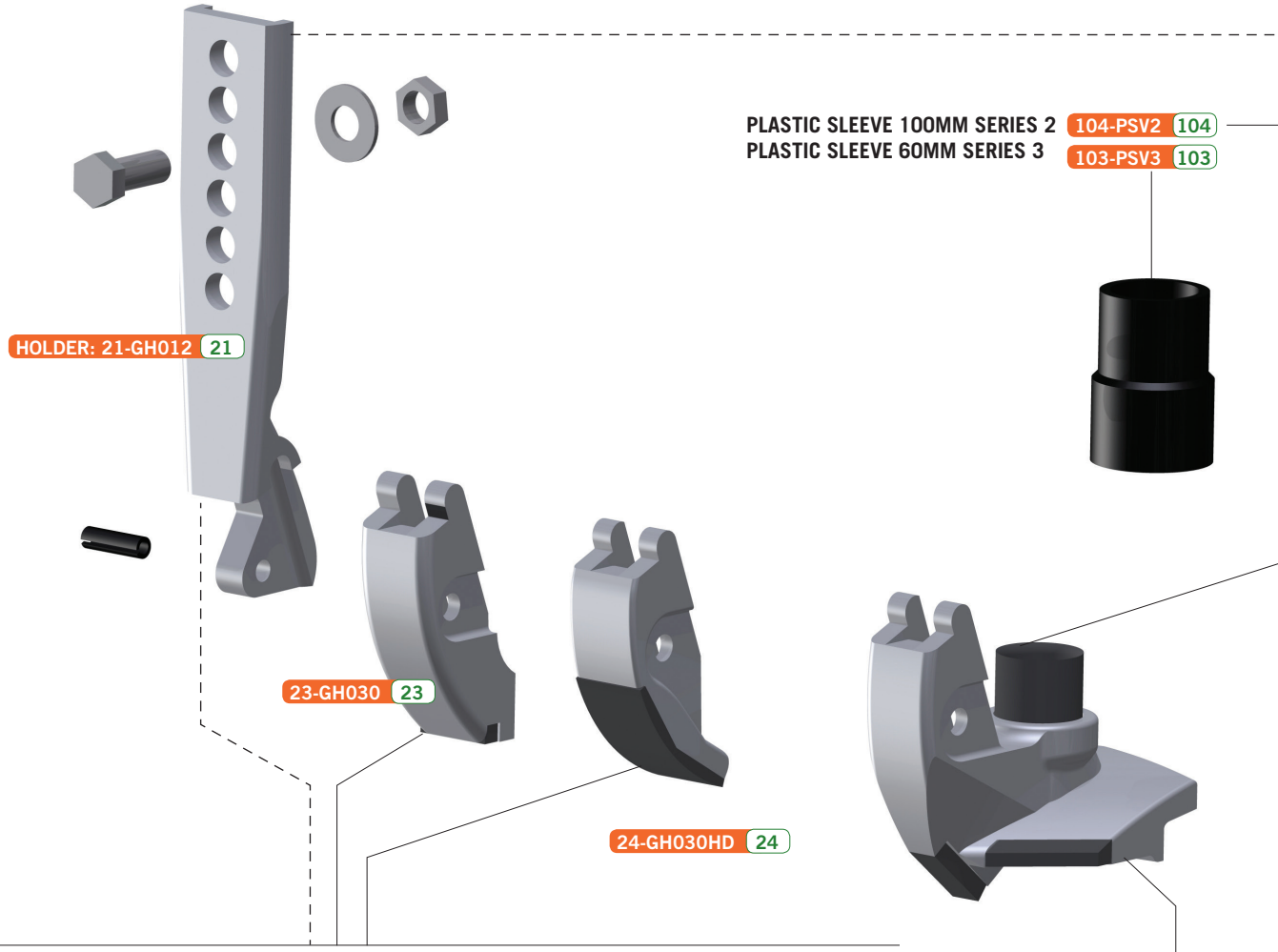

WEAR SHOES & HOLDER

- Made from two parts - Wear Shoe Holder' and 'Wear Shoe'.
- Most heavy duty closing tool on the market.
- Highest quality tungsten carbide used.
- The holder provides the same bolt hole pattern as a genuine closing tool.
- The wear shoe is made from cast steel and is secured using a high tensile roll pin (roll pin does not receive any load).
- Thick casting on wear shoe and large tungsten tiles on all sizes eliminates premature wear and reduces replacement costs.

underside profiles: **SPLITTER BOOT** 77-SB80 77

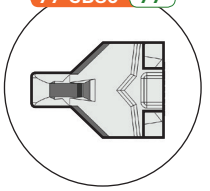

SEED SPLITTING BOOTS

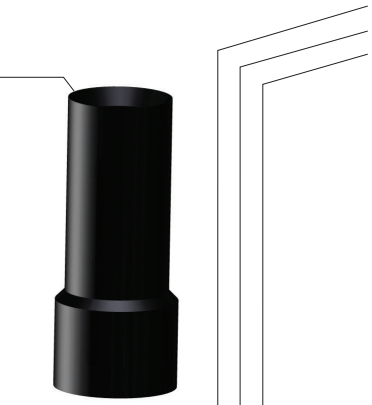

- System has 2 main parts holder & splitter boot.
- Splitter Boot compatible with 12” and 10” spacing’s machines.
- Suitable for Series 2, 3 & 4 machines
- Highest quality tungsten carbide used on all groundhog splitter boots.
- Places seed into the wall of the trench in the moisture zone. Helps to combat non wetting soils and seed depth problems in the knife slot where the soil may also be dry.
- No loss of seed to the bottom of the knife furrow.
- Seed is sown into uncultivated soil and the moisture zone.

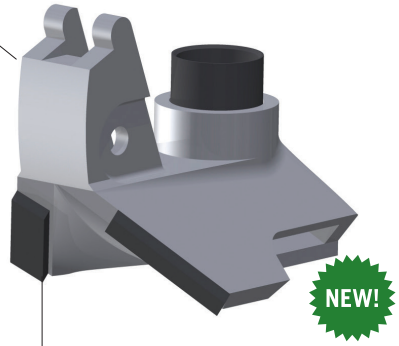

SPLITTER BOOT V2
77A-SB80V2 77A

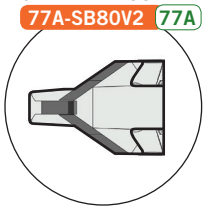

INVERTED SPLITTER BOOT
77B-1580 77B

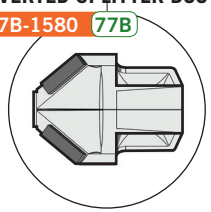

SPLITTER BOOT 77-SB80 77

- Priced competitively
- Leading tungsten tile at a reverse angle to help ride over obstacles.
- Low profile for minimal soil throw
- Suited to 70mm-90mm press wheel

DESIGN REG: 364181

NEW!

SPLITTER BOOT V2 77A-SB80V2 77A

- Leading tungsten tile at a reverse angle to help ride over obstacles.
- Heavy duty tungsten applied to each wing
- Specific draft angle to reduce drag & friction
- Thick underside base
- Suited to 70mm-90mm press wheel
- Extra tile of tungsten added to top of each wing

DESIGN REG: 201714877

NEW!

INVERTED SPLITTER BOOT 77B-1V80 77B

- Leading tungsten tile at a reverse angle to help ride over obstacles.
- Alternate profile to suit heavy duty conditions
- Inverted base / rounded middle section closes the knife trench ensuring seed separation
- Compatible with 70mm press wheel, best suited to 90mm+

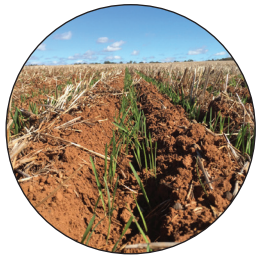

Splitter Boot results

Soil profile showing Splitter Boot from rear passing through soil (left) and resulting delivery of seed and fertiliser (right)

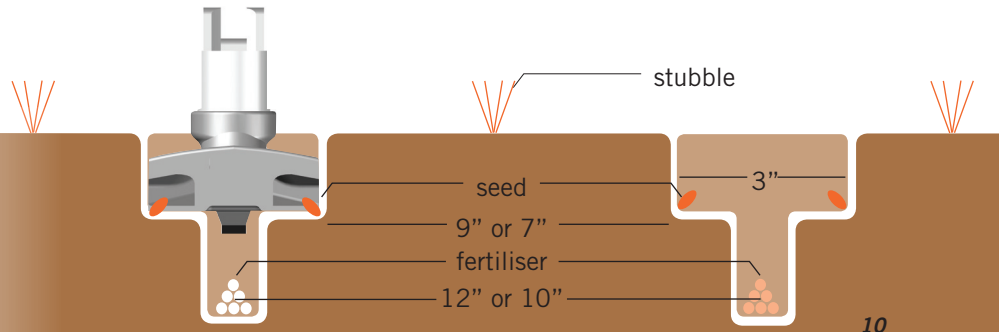

firm soil

KNIFE HOLDER, KNIFE & FERTILISER BOOT

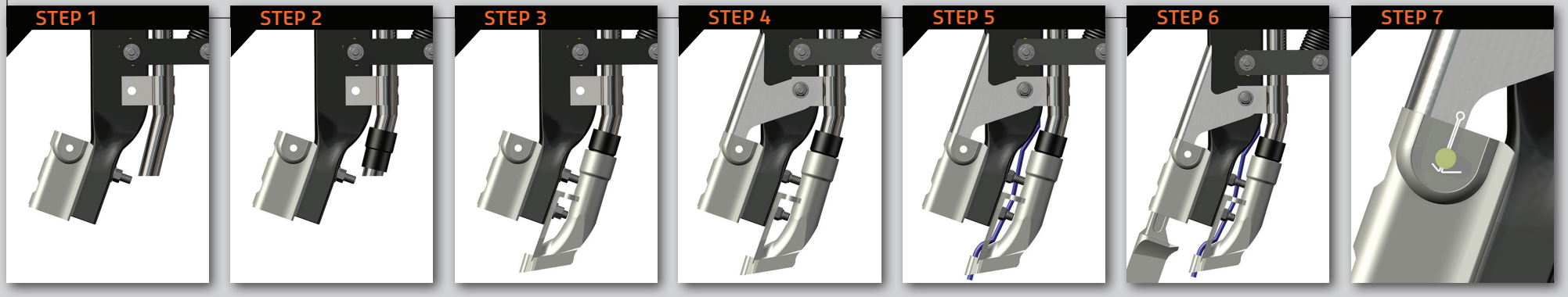

Install top bolt through the holder and tine and fully tighten Nyloc nut. Bolt heads should not turn inside holder.

Push plastic sleeve over fertiliser tube to first bend. No sleeve is required for older powder coated steel fertiliser tube.

Push boot onto fertiliser tube and install bottom bolt through holder and tine. Fully tighten Nyloc nut.

Install trash guard on top of knife holder. Secure using bottom bolt hole of fertiliser bracket.

Install liquid tube upwards into boot. Be sure to cut a length that will reach the existing plumbing.

Install point upwards into holder.

Insert clevis pin then split pin. Split pin to be protruding holder for easy removal with side cutters.

TESTIMONIALS

"We put these knives through conditions like concrete & they still held up!"

Nato Carbone, Salmon Gums WA

"Dry sowing is now becoming almost standard practice in the wheatbelt and will undoubtedly wear points more quickly. Choosing the most durable products for the job will save you time and money."

Tim Nixon, 'Border Reivers'
New Norcia WA

"Quick change points helped speed up downtime especially at night or in the rain. Best of all because the liquid tube is separate from the point it stays where it should be during point changes."

Stuart Hocking, 'Glendavale' Boxwood Hill WA

"Since 2012 we have been using Groundhog quick change points. We've been impressed with the design, durability & cost savings."

Stuart Faulkner, Beacon WA

WEAR SHOES & HOLDER

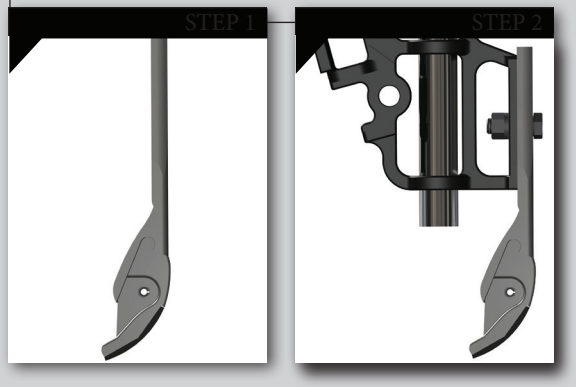

Use a vice to contain the holder. Locate female wear shoe casting onto male holder making sure holes align. Use hammer to tap roll pin into position.

Install wear shoe and holder onto machine. Use a new spring washer and optional wear shoe chain holder.

" We are focused on giving the farmer a well-designed, affordable and reliable product.

When a farmer tells us that our points **were** quick to change or that our fertiliser boots delivered an exceptional result, we know we are doing our job well.

Word of mouth is everything and our customers getting the most from our products is our main priority. "

Nadia Auldist,
Groundhog Industries, Sales

SERIES 2 MACHINES

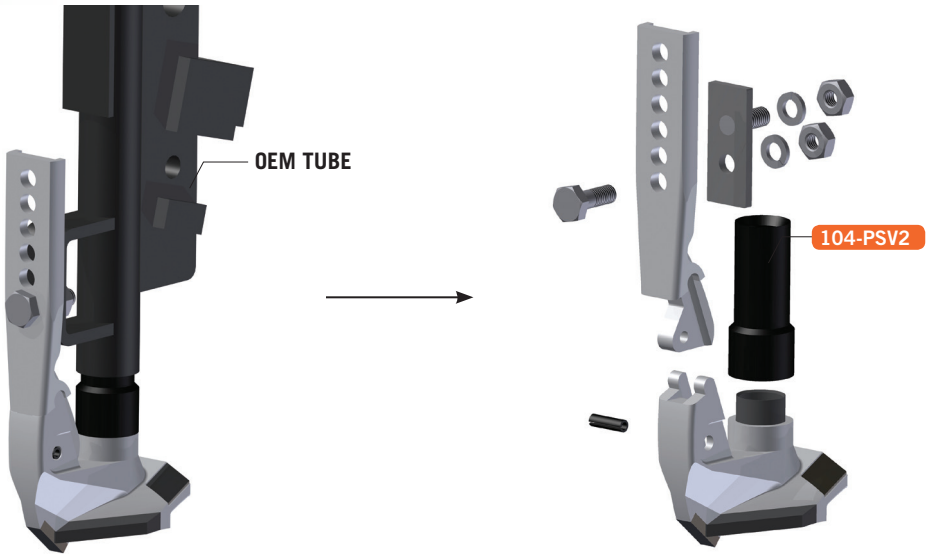

SERIES 3 & 4 MACHINES

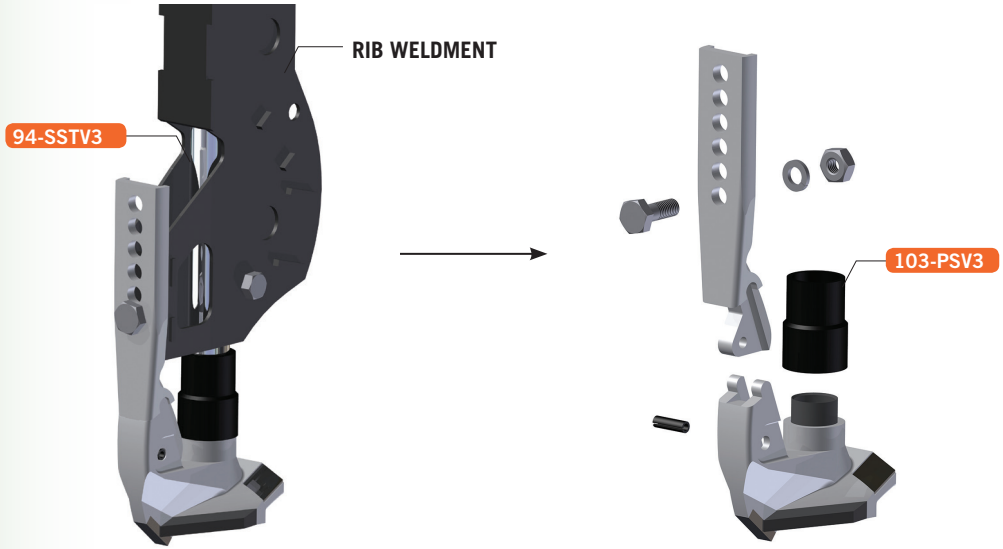

PRODUCT CODE 00 ITEM NUMBERS (SEE EXPLODED DIAGRAM P7-8) ITEMS NOT TO SCALE

SEAL CAP ZP HOUSING DUST SEAL
3-GHSEAL 3

SHORT BUSH SINTERED OIL IMPG. 4-GHSB 4
LONG BUSH SINTERED OIL IMPG. 5-GHLB 5

SPRING 5.6 X 42 X120
7-SP120 7

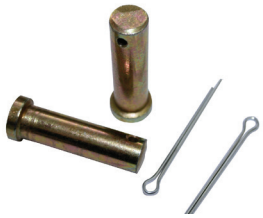

CLEVIS PIN 9-GH005 9
SPLIT PIN BAG OF 50 10-GHSPIN 10

PRESS WHEEL DUST SEAL 37X7X24
14-GHPWSEAL 14

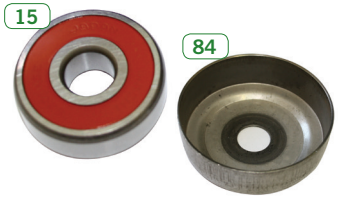

PRESS WHEEL BEARING 15-PWBJ 15
PRESS WHEEL BEARING COVER 84-PWBC1 84

PLASTIC SEED BOOT - 32 ID
20-GH32 20
PLASTIC SEED BOOT - 42 ID
20A-GH42 20A

HOSE CLAMP 19-44
29-GH44 29
HOSE CLAMP 32-50
29A-GH51 29A

OPEN END GEAR SPANNER
37-GHK3093

PIN SPRING HOLDER
42-PSH 42

GH STOPPER
43-STOPPER 43

RETAINING SPRING
44-RSPRING 44

SPRING
45-SSPRING 45

MUD SCRAPER 90MM S3 TINE
46B-90SCRAPERV3 46B
MUD SCRAPER 70MM S2 TINE
46A-70SCRAPERV2 46A
MUD SCRAPER 70MM S3 TINE
46-70SCRAPERV3 46

SCRAPER ARM V2 TINE
68-SAV2 68
SCRAPER ARM V3 TINE
89-SAV3 89

SIDE ARM UPPER (LONG)
47-ARMUP 47
SIDE ARM LOWER (LONG)
48-ARMLOW 48

SIDE ARM UPPER (SHORT)
48-ARMUPA 47A
SIDE ARM LOWER (SHORT)
48A-ARMLOWA 48A

PRESS WHEEL ARM
49-PWARM 49

TRASH GUARD
51-GHTRASH 51

BUSH HOUSING
60-BHOUSING 60
BUSH HOUSING NUT
61-BHN 61

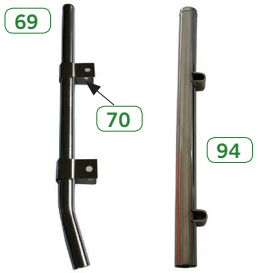

GRANULAR FERT TUBE
69-GFT 69
FERT TUBE BRACKET
70-FTB 70
STAINLESS SEED TUBE S3
94-SSTV3 94

WEAR SHOE HOLDER CHAIN
72-WSHC 72

PRESSWHEEL SPACER
73-PWS 73

AIR SEEDER HOSE 127MM X 1MTR
74-ASH 127 X 1
AIR SEEDER HOSE 63MM X 20MTR
75-ASH 63 X 20
AIR SEEDER HOSE 32MM X 20MTR
76-ASH 32 X 20

PRESSWHEEL TYRE 300 X 70MM
95-PWT70 95

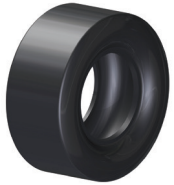

PRESS WHEEL TYRE 300 X 120MM
102-PWT120 102

PRESS WHEEL HUB
96-PWH 96
INTERNAL PRESSWHEEL SPACER
98-IPWS 98

6MM LIQUID FERTILISER TUBE
85-LFT1 102

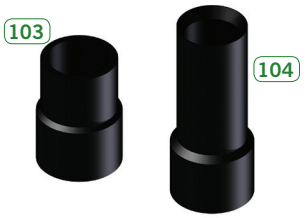

PLASTIC SLEEVE VERSION 3
103-PSV3 103
PLASTIC SLEEVE VERSION 2
104-PSV2 104

SHANK PIVOT KIT
123-SPK

NUTS & BOLTS

		PACK SIZE	
PARALLELOGRAM			
• BOLT M12 X 90 ZP (THREAD LOCK)	M12X90	1	N/A
• FLAT WASHER M12 ZP	M12WF	2	100
• NUT M12 CONELOCK	M12CONE	6	100
POINT HOLDER			
• BOLT ½"-13 X 3¼"	12-G8 12 X3.14NC8B	12	25
• NUT ½" UNC NYLOC G8	13-12NCNN	13	100
CLOSING TOOL/TRASH GUARD			
• NUT ½ UNC PLAIN NUT G8	16-12NC8NBU	16	N/A
• WASHER ½" SPRING ZP	18-12SQSW	18	200
• BOLT ½" X 1. ¾ UNC G8	38-12X1.34NC8B	38	50
SCRAPER SERIES 2			
• ½" x 1¼" UNC G8	126-12NC6	126	75
PRESS WHEEL ARMS			
• PWA BOLT- M16 X 70 ZP	87-PWBOLT	87	N/A
• PWA LOCK NUT M16 ZP	88-PWLN	88	N/A
PRESS WHEEL			
• BOLT M8 X 60MM	99-BM8X60	99	150
• WASHER M8 FLAT	100-WM8F	100	100
• NUT M8 CONELOCK	101-NM8CL	101	200
• BOLT M12 X 150	17-M12X150	17	25
• FLAT WASHER M12 ZP	2-M12WF	2	100
• NUT M12 CONELOCK	6-M12CONE	6	100
PIN SHANK PIVOT			
• NUT - M24 - ZP- NYLOCK	110-M24NLOCK	110	N/A
• WASHER FLAT- M24- ZP	112-WFM24	112	N/A
PIN SHANK SUPPORT/ CYLINDER BASE			
• NUT - M20 - ZP - CONELOCK	107-M20CONE	107	N/A
• WASHER FLAT - M20 - ZP	113-WFM20	113	N/A
PIVOT BRACKET			
• BOLT M20 X 60 C10.9 ZP	111-M20X60	111	N/A
• HEX NUT M20 C10.9 ZP	118-HNM20	118	N/A

GROUNDHOG INDUSTRIES

RAISING THE BAR

FOR SALES CONTACT:

TEL: 08 9337 7919
FAX: 08 9331 1384

PO BOX 291 SOUTH FREMANTLE 6162
1C ADAMS STREET, O'CONNOR 6163

EMAIL: NADIA@GROUNDHOG.COM.AU

WWW.GROUNDHOGINDUSTRIES.COM.AU

WARRANTY INFORMATION
As the selection, set-up and use of tillage and seeding equipment is affected by variables beyond our control, neither the Manufacturer nor any persons employed on its behalf including dealers or agents are liable for any loss or damage, whether consequential or otherwise, resulting from the use of its products. Warranty may / may not apply where any product is used for other than its intended and recommended purpose, or is subjected to pressures, loads or conditions beyond that for which it is designed. Should a product not perform its intended or recommended function, contact Groundhog Industries.